SPIDER ROBOT

ABSTRACT

This project proposes an android-based solution to assist security officers in defending their leader against enemy attacks. As data is being sent to the Node MCU device, it acts as a communication mechanism between the embedded section and the Android app on the smartphone. The GPS interface to the embedded sections will track the location information and communicate this, as well as the sensing values of the sensors to the mobile device using the android mobile application loaded on the smartphone. As a result, it is possible to assess the real time location. Temperature, gas, metal, and ultrasonic sensors are real-time monitoring sensors. Android devices receive frequent updates from the embedded device to which they are linked. This six-legged spider-like robot can navigate through rough surfaces and into any location using ultrasonic sensors.

BLOCK DIAGRAM

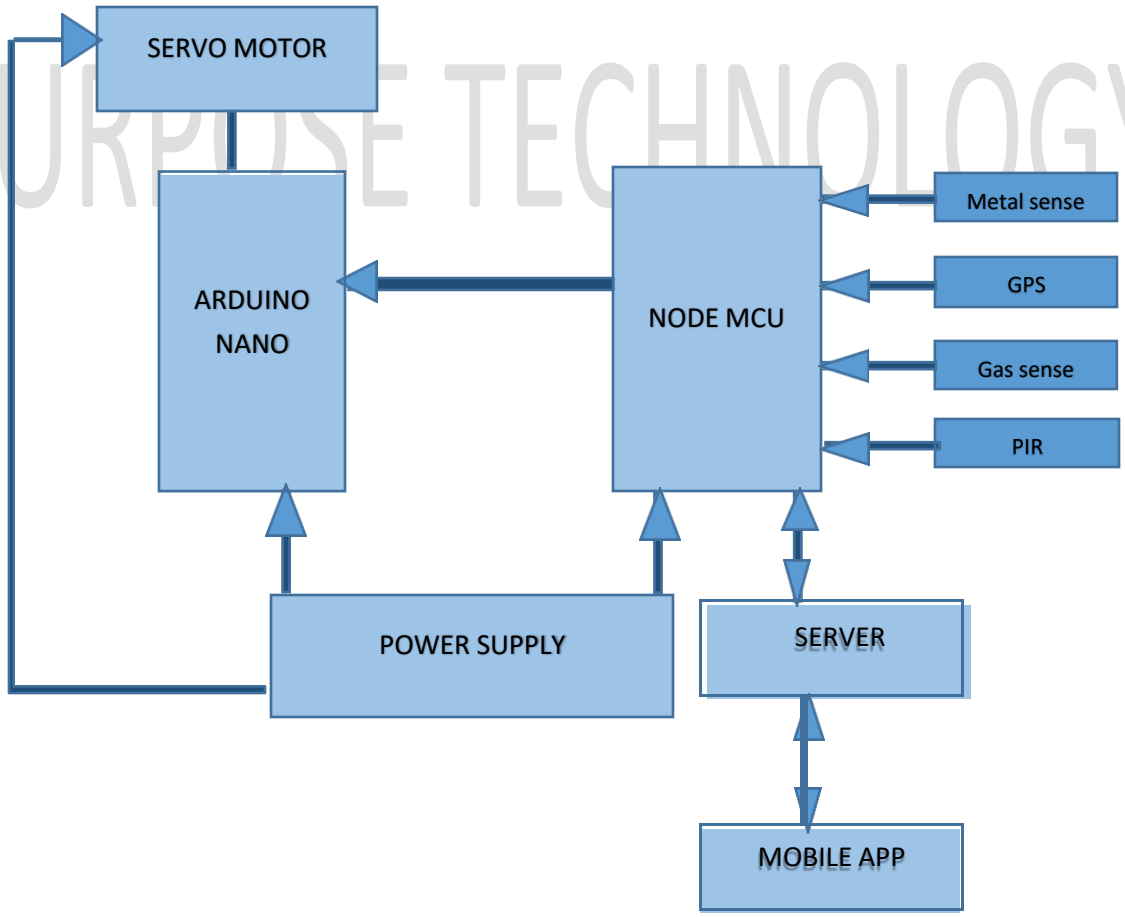

PURPUSE TECHNOLOGY